MODEL SD5

SQUARE WAVE STIMULATOR

INSTRUCTION MANUAL

GRASS® MEDICAL INSTRUMENTS SINCE 1935

QUINCY, MASS., U.S.A.

SERIAL # _____

MODEL SD5

SQUARE WAVE STIMULATOR

PLEASE DO NOT LOSE THIS MANUAL

ONE MANUAL IS SHIPPED with each instrument.

No "shortages" recognized.

Additional copies may be purchased at cost by owners of the instrument, but it is necessary to give the exact model and serial numbers.

The cost is $ 4.50

GRASS MEDICAL INSTRUMENTS SINCE 1935

QUINCY, MASS., U.S.A.

WARRANTY

Grass Instrument Company unconditionally warrants this instrument to be free from defects in materials and workmanship:

1. if the GIC seal (when present) is not broken,
2. if there is no evidence of abuse or attempted repairs without Grass Instrument Company authorization.

This warranty is binding for two years from date of initial delivery and is limited to: servicing and/or replacing any instrument or part thereof (except tubes, transistors or batteries) returned to the factory for that purpose with transportation charges prepaid and which to the company's satisfaction are found to be defective.

Until superseded or in contractual form, this warranty is made expressly in lieu of all other liabilities and obligations on the part of Grass Instrument Company.

DAMAGE UPON ARRIVAL

Each instrument leaves our plant after rigorous tests, in perfect operating condition. The instrument may receive rough handling and damage in transit. The shipment is insured against such damage. The buyer must report in writing immediately any concealed or apparent damage to the last carrier. Report any damage also to us, and issue an order for replacement or repair. Our invoice for such service will then be evidence in the claim.

DEFECTS OCCURRING WITHIN WARRANTY PERIOD

Because of the human element involved, parts of units may develop defects which no amount of initial testing will reveal. The price of our instruments makes provision for such service, but it does not:

1. provide for any transportation charges,
2. provide for services not performed or authorized by us,
3. provide for the cost of repairing instruments which have obviously been abused or subjected to unusual environments for which they have not been designed.

We will be happy at any time to discuss by phone or letter suspected defects or aspects of instrument operation which may be unclear. We advise you to inform us by phone or letter of the nature of the defect before returning an instrument for repair. Many times a simple suggestion will solve the problem without returning an instrument to the factory.

WARRANTY ON SPECIFICATIONS

Grass Instrument Company warrants each instrument to satisfy printed specifications available to the purchaser on formal request thirty days prior to date of scheduled delivery. Specifications are the average of typical measurements made on production units under controlled conditions. Statistical variations in individual units due to normal component variations are to be expected and should not alter the intended use of the instrument. However, when parameter characteristics are critical, tolerances are specified and guaranteed. Operating characteristics can be expected to change slightly from printed specifications with age and long term use.

Unless the exact tolerances of any parameter of any instrument are specified on the purchase order and specifically agreed to by Grass Instrument Company, it is assumed that our standard production tolerances will satisfy all contractual responsibilities.

Copyright 1967. Reproduction in whole or in part must not be made without the written permission of Grass Instrument Company.

101 OLD COLONY AVENUE
QUINCY, MASS. 02169

617-773-0002

SERVICE

--HERE'S WHAT TO DO--

FOR INFORMATION PHONE OR WRITE:

"INSTRUMENT SALES"	for catalogs, ordering, delivery, and instrument applications.
"CUSTOMER SERVICE"	for trouble shooting advice, repair and replacement service.
"CHART PAPER SALES"	for recording chart paper.
"SUPPLY DEPARTMENT"	for electrodes, electrode cream, ink, pens, tubes, and other expendables.

DELIVERY OF YOUR GRASS INSTRUMENT IS NOT THE END - - - - BUT THE BEGINNING.

--OUR WARRANTY IS FOR TWO YEARS--

WE HAVE PROMPT EFFICIENT FACTORY SERVICE TO BACK IT UP.

However, our warranty does not cover transportation costs if repairs become necessary. Many universities and hospitals have Purchasing and Receiving Departments that must be informed. A PURCHASE ORDER NUMBER OR AUTHORIZATION IS NECESSARY. Therefore, we urge you to contact them before contacting us.

IF, "Instrument was damaged in transit" . . . .

a. Save packing materials for inspection by carrier's agent,

b. Obtain a joint inspection report from the carrier who delivered the instrument,

c. Report full details immediately to Grass Instrument Company.

IF, "It doesn't work" . . . .

a. We can ADVISE a solution to your problem but we need all the facts, including model and serial number of the instrument and symptoms of instrument malfunction. If possible, phone from a location near the instrument.

b. We can REPLACE damaged or defective units.

c. We can often send a STANDBY unit while yours is returned and repaired.

®GRASS MEDICAL INSTRUMENTS SINCE 1935
QUINCY, MASS., U.S.A.

Digitized by the Internet Archive
in 2026 with funding from
University of Toronto

https://archive.org/details/uoftmanuals011

SQUARE WAVE STIMULATOR with STIMULUS ISOLATION

MODEL SD5

by GRASS

FOR RESEARCH AND ADVANCED STUDENT LABORATORIES

- ▲ MODES: DC, manual single pulses, repetitive pulses.
- ▲ REPETITION RATE: 0.2 to 200 pulses per second.
- ▲ PULSE DURATION: 0.02 to 200 milliseconds.
- ▲ PULSE DELAY: 0.2 to 200 milliseconds from Sync. pulse.
- ▲ VOLTAGE OUTPUT: ± 0.08 to 80 volts peak. Not grounded.
- ▲ ALL PARAMETERS: Continuously variable in three decade ranges.
- ▲ STIMULUS ISOLATION: Circuit included at no extra cost.
- ▲ TWIN PULSES: Pairs of like pulses with 200 millisecond maximum variable delay between pulses, from one SD5.
- ▲ PULSE PAIRS: Independently variable parameters of each pulse with spacing up to 200 milliseconds when driven from another SD5 or S5.
- ▲ PULSE GROUPS: Up to 200 milliseconds group duration when modulated by another SD5 or S5.
- ▲ SYNCHRONOUS INPUTS AND OUTPUTS: For CRO sweep and for driving and being driven by other stimulators or remote switch.

© GRASS INSTRUMENT CO. 1967

GRASS MEDICAL INSTRUMENTS SINCE 1935

QUINCY, MASS., U.S.A.

GRASS MODEL SD5 STIMULATOR SPECIFICATIONS

APPLICATION intended is for advanced student studies, teaching demonstrations and limited research. It is particularly useful where CRO recording is done near the site of stimulation. The SD 5 is nearly identical to the S 5 except that it has a variable delay function between the synchronous output pulses and the stimulus pulses. This is useful in many problems, particularly when stimulators are coupled together to produce trains of pulses. If greater range of parameters, greater stability, greater output, remote isolation, etc., are required, then the Model S 4, our research model, is recommended.

FEATURES include a switch so that twin pulses separated by the variable delay up to 200 milliseconds may be generated from one SD5. While such identical pulses are not the classical way to study nerve refractory periods they are useful for many purposes. Any combination of two S5s, SD 5s or S 4s will provide two independently controlled pulses. Also any combination can be arranged to produce tetanizing stimulation. In this case, the first stimulator controls the group repetitive rate and duration. The second stimulator controls the rate duration and voltage of the pulses.

PULSE WAVEFORMS (not to scale) Time in Microseconds Load Resistance 2500 Ohms

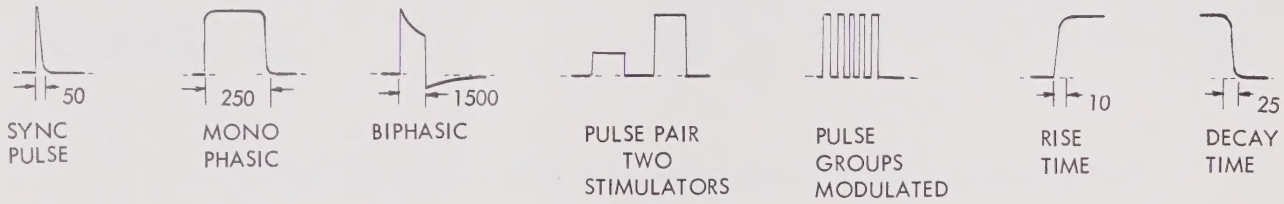

DELAY FUNCTION variable from 0.2 to 200 milliseconds separates the SYNC OUT (NO DELAY) pulse from the stimulus pulse.

SYNCHRONOUS OUTPUT PULSES are 35 volts positive. The SYNC OUT (NO DELAY) pulse precedes the stimulus pulse as selected by the variable delay. The SYNC OUT (DELAY) pulse occurs at the end of the delay period which is the same as the onset of the stimulus pulse.

SYNCHRONOUS INPUT preferred is a positive pulse (with no negative overshoot) of 25 to 40 volts duration not greater than 50 microseconds. A CONTACTOR INPUT is provided so the SD5 may be synchronized with mechanical contacts such as are in the *GRASS* recording camera.

OUTPUT VOLTAGE ISOLATION CIRCUIT is built in to allow recording near the site of stimulation with minimum artifact. Output voltage is not referred to ground. An output polarity switch is included. Output impedance is about 1000 ohms.

BIPHASIC PULSES are derived from the monophasic pulse by adding a 1.0 microfarad capacitor in series with the output. This waveform reduces electrode polarization due to ion movement since positive and negative energy are equal.

SIGNAL MAGNET CONTROL is available from extra contacts on the MODE switch. These are wired to a two-contact female Jones 202 Connector at the rear of the SD5 chassis. These contacts may be used to operate a signal magnet if desired. When connected this way, the signal magnet deflects whenever the MODE switch is moved from the OFF to either of the ON positions, and likewise when moved from either of the ON positions to OFF. The signal magnet does NOT deflect with each individual stimulus pulse.

NEON MONITOR LAMP flashes with each stimulus pulse.

TERMINALS will accept bare wires, phone tips or single or dual banana plugs.

DIALS have linear scales. Dial accuracy is ± 5% except for the voltage dial which is accurate to ± 10%.

POWER is 35 watts at 115 volts, 50 - 60 cycles.

DIMENSIONS 7"H x 11-1/2"W x 8"D WEIGHT Net 10 lbs, Shipping 15 lbs.

Specifications subject to change without notice.

CONTENTS

SECTION 1 SPECIFICATIONS

SECTION 2 RANGE OF APPLICATIONS

2.1 General Information

SECTION 3 CONTROLS

3.1 Mode Control

3.2 Frequency Controls

3.3 Delay Controls

3.4 Duration Controls

3.5 Voltage Controls - Voltage Out

3.6 Stimulus Selector Switch

3.7 Output Switch

3.8 Polarity Switch

SECTION 4 STIMULUS ISOLATION

4.1 Reduction of Stimulus Artifacts

4.2 Stimulus Current Monitoring

SECTION 5 SYNCHRONOUS OUTPUTS & INPUTS

5.1 Synchronous Outputs

5.2 Synchronous Inputs

SECTION 6 CONNECTIONS WITH OTHER DEVICES

6.1 Trains of Pulses - Modulation

6.2 Pairs of Pulses

6.3 Twin Pulses (One SD5)

6.4 CRO Sweep Synchronization

6.5 Driving the SD5 From the Grass C4 Kymograph Camera

SECTION 7 CALIBRATION

7.1 General Information

7.2 Calibration Equipment

7.3 Calibration Using a Calibrated CRO (of known accuracy)

7.4 Calibration Using An Uncalibrated CRO

SECTION 8 MAINTENANCE

8.1 Defects

SECTION 9 ILLUSTRATIONS AND DIAGRAMS

9.1 Circuit Diagrams

9.2 Waveforms

9.3 Monitoring Stimulus Current

9.4 Rear View of The SD5

9.5 Trains of Pulses

9.6 Pairs of Unlike Pulses

9.7 Location of Calibration adjustments

SECTION 2

APPLICATIONS

2.1 GENERAL INFORMATION

2.11 The SD 5 provides electrical stimulation for nerve and muscle preparations in the form of square pulses, biphasic pulses and DC voltages. Either single or repetitive pulses may be selected.

2.12 The SD 5 is suitable for most experimental work and advanced student laboratories.

2.13 The output isolation circuit provides an extra margin of safety in operation room applications.

2.14 Synchronous inputs and outputs facilitate the use of the SD 5 with other equipment such as cathode ray oscilloscopes, the Grass C 4 Kymograph Camera and other stimulators.

2.15 Isolation of the output of the SD 5 permits the recording of electrical responses following stimulation with minimum stimulus artifact.

2.16 The major difference between the S 5 and the SD 5 is that the SD 5 has a separate stimulus delay circuit which is operative at all times, whereas the S 5 delay is operative only when the S 5 is driven from an external source.

2.17 An AC outlet is provided on the rear of the chassis. Power to operate another stimulator or auxiliary equipment may be obtained from this outlet. However, do not operate instruments which draw more than 1 ampere of current or consume more than 100 watts of power from this receptacle.

SECTION 3

CONTROLS

3.1 MODE CONTROL

3.11 The MODE switch selects either repetitive or single stimulus pulses.

3.12 A single pulse is produced when the MODE switch is depressed to the SINGLE (down) position. In the SINGLE position, the switch is spring loaded and when released will return to the OFF position.

3.13 Repetitive pulses at the rate indicated on the FREQUENCY DIAL are produced as long as the MODE switch is in the REPEAT (up) position.

3.14 When the MODE switch is in either the SINGLE or REPEAT position, a set of contacts is closed. These contacts are available at a two contact female Jones 202 connector located on the rear of the chassis, and may be used to operate a signal magnet. (See Section 5.13)

3.2 FREQUENCY CONTROLS

3.21 The position of the FREQUENCY dial and the setting of the MULTIPLY BY switch determine the rate of output pulses generated. The number of pulses per second is equal to the reading on the FREQUENCY dial multiplied by the setting of the multiplier switch. For example, with the FREQUENCY dial on 15 and the multiplier on 0.1, the output pulse frequency is 1.5 pulses per second.

3.3 DELAY CONTROLS

3.31 The delay circuit introduces a variable time delay between the SYNC OUT signal and the rising phase of the stimulus pulse.

3.32 The settings of the DELAY dial and the MULTIPLY BY switch determine the amount of delay. For example, with the DELAY dial at 2 and the MULTIPLY BY switch on X10, there is a delay of 20 milliseconds.

3.33 When using repetitive pulses, the delay setting should not exceed 50% of the period between pulses. The period between pulses in seconds is the reciprocal of the frequency in pulses per second.

3.4 DURATION CONTROLS

3.41 The settings of the DURATION dial and MULTIPLY BY switch control stimulus DURATION. For example, with the DURATION dial on 5 and the MULTIPLY BY switch on X.1, there is a pulse duration of 0.5 milliseconds.

3.42 When using repetitive pulses, the pulse duration setting should not exceed 50% of the interval between pulses.

3.5 VOLTAGE CONTROLS - VOLTAGE OUT

3.51 OUTPUT PULSE and DC voltages are determined by the settings of the VOLTS dial and MULTIPLY BY switch. For example, with the VOLTS dial on 2.4 and the MULTIPLY BY switch on X10, the amplitude of the output pulses (or DC voltage) is 24 volts. In all cases the VOLTS controls indicate the open circuit output voltage.

3.52 OUTPUT IMPEDANCE of the SD 5 is nearly constant at approximately 1000 ohms on both the X.1 and X1 positions of the MULTIPLY BY switch. On the X10 position the output impedance decreases from approximately 2000 ohms at the low end of the dial to about 1000 ohms at the high end. If the electrode impedance is high (above 5000 ohms) the effect of this variable impedance on the X10 position may be neglected in most cases. If the electrode impedance is low or if a more "constant current" source is desired, a high value of resistance may be added in series with the electrode, provided there is still sufficient voltage from the SD 5 to stimulate the preparation. The effect of the impedance variability of the X10 position is negligible if a series resistance of 5000 ohms or more is added. To satisfy the conditions of a "constant current" source the added series resistance should be at least 5 or 10 times the electrode impedance.

3.53 When beginning stimulation, set the MULTIPLIER at X.1 and the VOLTS dial at 0.8. Increase the voltage gradually until threshold is reached. If threshold is approached from the high voltage side the preparation maybe injured with too much current.

3.54 The MONITOR lamp flashes on during the duration of each pulse only. It is independent of the voltage controls. Short pulses may be hard to see in room light.

3.6 STIMULUS SELECTOR SWITCH

3.61 In the REGULAR position of the STIMULUS SELECTOR switch the SD 5 may be operated by the MODE switch (Section 3.1), driven by synchronization pulses from other stimulators (Section 5.21), or operated by a contactor (Section 5.23).

3.62 In the MOD position, trains of pulses may be obtained by modulating the SD 5 output with another stimulator (Section 6.1).

3.63 In the TWIN PULSE position, two like output pulses are obtained each time a stimulus is initiated. The setting of the DELAY controls determines the interval between pulses. A pulse pair is produced each time the MODE switch is depressed to the SINGLE position, or each time a stimulus pulse is initiated by the FREQUENCY circuit if the MODE switch is in the REPEAT position. The amplitude and duration of the pulses are determined as outlined in Sections 3.5 and 3.4.

3.7 OUTPUT SWITCH

3.71 The OUTPUT switch selects monophasic pulses, biphasic pulses or DC voltage. The output wave forms obtained in the MONO (monophasic) and B1 (biphasic) positions of the OUTPUT switch are shown in Section 1. In the B1 position a capacitor is in series with the red (+) output terminal. This minimizes the electrode polarization due to ion movement since it tends to equalize the positive and negative stimulus energies. During long periods of stimulation as when stimulating through implanted electrodes, a biphasic stimulus helps reduce the formation of gas bubbles and deposits of substances by electrolysis.

3.72 The DC voltage obtained at the output terminals when the OUTPUT switch is in the DC position is present as long as the MODE switch is maintained in either the SINGLE or REPEAT position.

3.8 POLARITY SWITCH

3.81 The output voltage at the red (+) output (OUT) terminal may be made either positive or negative with respect to the black output (OUT) terminal by selecting the appropriate position of the POLARITY switch. When the OUTPUT switch is in the B1 position, the inital voltage phase will be of the polarity indicated by the POLARITY switch.

SECTION 4

STIMULUS ISOLATION

4.1 REDUCTION OF STIMULUS ARTIFACTS

4.11 The S 5 and SD 5 have built in ground isolation circuits which work as follows. A pulse with the duration indicated by the DURATION dial modulates a Radio Frequency oscillator. The RF oscillator transformer is designed so that its secondary coil has low capacitance and conductance to ground. The secondary voltage is rectified and filtered. The output voltage stimulus pulse is then nearly identical with the modulating pulse, but is isolated from ground.

4.12 This method is primarily useful to reduce artifacts due to ground currents between stimulating and recording systems via the preparation. It is also valuable as a safety device in isolating the stimulating electrodes from ground, thus providing greater safety for the subject, and in the operating room. Furthermore, it allows direct addition of stimuli of either algebraic sign without further consideration. It is not proposed as a cure-all for all stimulus artifact problems. For example, the artifact caused by the presence of the recording electrodes in a strong local field produced by the stimulus currents cannot be eliminated by any device since the recording electrodes measure the current in the stimulus field.

4.13 An intermediate situation is the case where a large volume surrounds the closely spaced stimulating electrodes, as in cortical stimulation. Here the stimulus current has a three dimensional field pattern which decreases with the cube of the distance from the electrodes. In recording from such a three dimensional mass it is very important to reduce ground currents, and the Stimulus Isolation Circuit does this job well. This is particularly necessary in the instances of multi-channel recording such as with the Electroencephalograph.

4.14 In some applications inserting equal resistances in series with both electrodes is effective in reducing ground current artifacts. Choose as high a resistance value as possible consistent with stimulus current requirements. Such series resistances can also be used to simulate constant current sources.

4.2 STIMULUS CURRENT MONITORING

4.21 Since the preferred description of electrical stimulus is in terms of stimulus current rather than voltage it is often desirable to measure the actual stimulus current. When using a DC stimulus, average current can be measured with a DC milliammeter connected in series with the stimulating electrodes. Stimulus isolation can be maintained as long as the meter is isolated from ground.

4.22 With square wave stimulation peak stimulus current is determined by a Cathode Ray Oscilloscope (CRO) measurement of the square wave voltage across a series resistance whose value is very small compared to that of the stimulating electrodes.

The current is calculated using Ohm's Law. However, stimulus isolation is lost using this method since the input of the CRO is referred to ground. If stimulus isolation must be maintained for the simultaneous recording of electrical responses, the best solution is to measure current periodically during the course of the experiment. The circuit for intermittent measurement of stimulus current is shown in FIGURE 9.3. It is fairly safe to assume that the stimulus current has remained constant between two current measurements if the current is the same for both measurements, and the VOLTS controls have not been changed. If it is not necessary to maintain stimulus isolation the double pole switch can be eliminated and current monitored continously with one side of the CRO at ground potential. With the circuit shown in FIGURE 9.3 each milliamp of stimulus current will result in a voltage drop of 10 millivolts across the 10 ohm resistor. Calibrate the CRO for a sensitivity of 10 MV/CM. The CRO deflection can be measured in terms of stimulus current, each centimeter of deflection indicating 1 milliamp of stimulus current.

SECTION 5

SYNCHRONOUS OUTPUTS & INPUTS

5.1 SYNCHRONOUS OUTPUTS

5.11 SYNC. OUT NO DELAY is a positive pulse of 35 volts and 50 microseconds duration. This pulse is coincident with the output of the FREQUENCY circuit and the start of the DELAY pulse as shown in FIGURE 9.2, and is used primarily to synchronize the sweep of a cathode Ray Oscilloscope. Avoid loading the SYNC. OUT NO DELAY terminal with an impedance lower than 25,000 ohms.

5.12 SYNC. OUT DELAY is a positive pulse of 35 volts and 50 microseconds duration. This pulse is coincident with the end of the DELAY pulse and the rising phase of the stimulus pulse. (See FIGURE 9.2). The primary use of the SYNC. OUT DELAY pulse is to drive another SD5 at its SYNC. IN terminal. Avoid loading the SYNC. OUT DELAY circuit with impedance lower than 25,000 ohms.

5.13 SIGNAL MAGNET contacts, so labeled, are available at a Jones 202 receptacle located at the rear of the chassis. (See FIGURE 9.4). These contacts close each time the MODE switch is placed in either the SINGLE or REPEAT position, and remain closed until the switch is returned to the OFF position. The SIGNAL MAGNET contacts may be used to control other devices which operate from the closing of switch contacts. The contacts are rated at one ampere. A voltage source for operating a signal magnet is not included.

5.2 SYNCHRONOUS INPUTS

5.21 SYNCHRONOUS DRIVING of the SD5 is accomplished by introducing a positive pulse of 25 to 40 volts (with no negative overshoot) and not more than 50 microseconds duration at the SYNC. IN terminal on the front panel. When one SD5 is driven by the SYNC. OUT pulses of another SD5 a small error is introduced in the delay circuit of the driven stimulator on the X.1 range. This error can be eliminated by placing a 51,000 ohm resistor in series with the lead from the SYNC. OUT terminal of the driving stimulator and the SYNC. IN terminal of the driven stimulator.

5.22 MODULATION OF AN SD5 is accomplished by introducing a positive 80 volts at the MOD terminal with the STIMULUS SELECTOR on MOD. and the MODE switch in the REPEAT position. Stimulus pulses from the SD5 will be produced as long as this voltage is applied. When the modulating voltage is obtained from the output of an S4, S5 or another SD5 repeating trains of pulses at prescribed rates can be obtained. (See Sec. 6.1.)

5.23 EXTERNAL CONTROL from a pair of external contacts (switch, relay contacts, commutator contacts etc.) will generate one stimulus pulse for each closure of the contacts. Operating from external contacts is functionally the same as operating the MODE switch in the SINGLE position. Repetitive pulses utilizing the FREQUENCY circuit cannot be generated with contactor operation, and the MODE switch must be left in the OFF position. The EXTERNAL CONTROL input (so labeled) is a two contact Amphenol receptacle located on the rear of the chassis. The mating connector is an Amphenol PC2F. To operate the SD5 from contacts, connect two leads from a pair of normally open contacts to the two contacts in the input plug. The contactor input plug has 75 volts DC (plus 60 to minus 15 volts DC) across the EXTERNAL CONTROL input. Do not connect either of the EXTERNAL CONTROL contacts to ground or to any circuit other than the isolated contacts to be used for control.

SECTION 6

CONNECTIONS WITH OTHER DEVICES

6.1 TRAINS OF PULSES - (MODULATION)

6.11 The output of an S5, S4 or another SD5 may be used to Modulate (turn on and off at prescribed intervals) the pulse output of an SD5. An SD5 may also be used to modulate an S5 but not an S4. A typical setup and the resulting stimulus pattern is shown in FIGURE 9.5.

6.12 To obtain a train of pulses five times a second with the stimulus parameters shown in FIGURE 9.5 the control settings of the two stimulators would be as follows:

CONTROL	STIMULATOR #1 (Modulating)	STIMULATOR #2 (Modulated)
MODE	REPEAT	REPEAT
STIMULUS SELECTOR	REGULAR	MOD
FREQUENCY	5 Pulses/sec.	50 Pulses/sec.
DELAY	.2 MS	.2 MS
DURATION	90 MS	2 MS
VOLTS	80	5
OUTPUT	MONO	MONO
POLARITY	NORMAL	NORMAL

In the above instances five 2 MS pulses are produced five times a second. The DURATION of stimulator #1 is set so at 90 MS, Stimulator #2 is turned off 10 MS after the fifth pulse. If it were set at exactly 80 or exactly 100 there is a possibility the fifth pulse might be lost with a setting of 80 MS and of a sixth pulse occurring with a setting of 100 MS. When setting up the stimulators for modulation monitor the output of Stimulator #2 to be certain the output is the desired one. If the last pulse does not appear on every sweep, increase the DURATION of Stimulator #1 slightly to include the intermittent pulse, or decrease the DURATION slightly to eliminate it.

6.2 PAIRS OF PULSES

6.21 PAIRS OF PULSES with a variable interval between pulses and independent control of the parameters of each pulse are obtained by driving one SD5 with the SYNC. OUT DELAY pulse of another SD5, (or by the appropriate SYNC. OUT pulses of an S4 or S5 stimulator). As shown in FIGURE 9.6 a lead is connected between the SYNC. OUT DELAY terminal of the driving Stimulator and the SYNC. IN terminal of the driven Stimulator. A grounding lead is connected between the GND. (ground) terminals of the two Stimulators. The stimulus pulses should be monitored on a CRO before connecting the stimulating electrodes to make sure that the wave form obtained is the desired one.

6.22 ADDITION OF THE OUTPUTS of two Grass stimulators having outputs Isolated from ground (Models S5, SD5 and Model S4 with a model SIU4 Stimulus Isolation Unit) may be combined to stimulate through a single pair of electrodes. The outputs should be connected in series for this purpose.

6.23 The parameters of the two pulses are independent and are determined by the control settings of the two Stimulators.

6.24 The interval between pulses is set with the DELAY control of the driven stimulator.

6.25 When repetitive pulse pairs are generated the duration of each pulse and the interval between pulses should not exceed one-half the period of the repetition rate. (e.g. If the FREQUENCY controls of the driving stimulator are set for 10 pulses per second the period is 100 milliseconds. Therefore the duration of each pulse and the delay setting of the driven stimulator should not exceed 50 milliseconds.

6.3 TWIN PULSES (ONE SD5)

6.31 Twin pulses (identical in voltage and duration) are generated with a single SD5 (when the STIMULUS SELECTOR is in the TWIN PULSES position), each time the MODE switch is depressed to the SINGLE position. When the MODE switch is placed in the REPEAT position repetitive pulse pairs are produced at a rate determined by the FREQUENCY controls.

6.32 The interval between the pulses is set with the DELAY controls. When using repetitive twin pulses do not use delays greater than one-half the period of the repetition rate. (The period in seconds is equal to the reciprocal of the FREQUENCY control setting in pulses per second.)

6.4 CRO SWEEP SYNCHRONIZATION

6.41 Synchronization of the CRO sweep is accomplished by connecting a lead from the SYNC. OUT NO DELAY terminal of the SD5 to the external synchronization or external trigger terminal of the CRO. Connect a lead between the ground (GND) terminal of the SD5 and the ground terminal of the CRO.

6.5 DRIVING THE SD5 FROM THE GRASS C4 KYMOGRAPH CAMERA

6.51 The SD5 may be driven by the C4 Camera by connecting either the contactor or relay output of the C4 to the EXTERNAL CONTROL input of the SD5. (See Section 5.23). It may also be driven by connecting the shutter output of the C4 to the SYNC. IN terminal of the SD5. One Stimulus pulse is generated for each closure of the contacts. In all instances the ground terminals of the SD5 and the C4 should be connected. For further details see Section I - Synchronous Outputs - of the C4 manual and refer to the SYNCHRONIZING BLOCK DIAGRAMS, which show the location of the various synchronizing outputs of the C4.

SECTION 7

CALIBRATION

7.1 GENERAL INFORMATION

7.11 The FREQUENCY, DELAY and DURATION circuits are calibrated at the factory for an accuracy of ± 5%. The output voltage (VOLTS) circuit is calibrated for an accuracy of ± 10%. The DURATION and FREQUENCY dial readings will not vary appreciably for line variations within the range of 105 to 130 volts A.C. However, the output voltage (VOLTS) dial readings will be proportional to line voltage changes over this range but will remain within ± 10%.

7.12 Calibration may shift slightly with time. If high accuracy is required, the dial readings should be checked periodically and the calibration readjusted when necessary. Do not attempt recalibration unless you are familiar with the techniques of time measurement with a cathode ray oscilloscope (CRO) and have a basic understanding of the SD5 circuitry. Instead, return the stimulator to the Grass Instrument Company for recalibration. The location of the calibration adjustments is shown in FIGURE 9.7.

7.2 CALIBRATION EQUIPMENT

7.21 At the factory a CRO with an accurately calibrated sweep circuit and voltage calibrated vertical amplifier is used for calibration purposes. This is the preferred method if such an instrument is available. Even with a calibrated CRO, its calibration must be checked at all points against a time standard (such as a crystal controlled oscillator or the power line frequency) to insure accuracy. In areas where electric clocks keep accurate time the instantaneous accuracy of power line frequency is better than 0.1%.

7.22 Reasonably accurate calibrations can be made using an inexpensive CRO. Calibration procedures using both a calibrated CRO (Section 7.3) and an uncalibrated CRO (Section 7.4) are included in this manual.

7.3 CALIBRATION USING A CALIBRATED CRO (of known accuracy)

7.31 Frequency Calibration

a. Connect a lead from the black output (OUT) terminal to the white ground (GND) terminal of the SD5.

b. Connect a lead from the red (±) output terminal of the SD5 to the vertical amplifier input terminal on the CRO. (If the CRO input is push-pull, connect a lead from the other CRO vertical amplifier input terminal to the CRO ground terminal).

h. Adjust the HI duration calibration potentiometer for a pulse duration of 14 MS.

i. Check the pulse durations at settings of 2 MS, 6 MS, 10 MS, 16 MS and 20 MS.

k. If dial readings are not accurate within ± 5%, repeat steps c through h. The DURATION dial should now read within ± 5% on all ranges.

7.33 Delay Calibrations

a. The connections to the CRO are the same as outlined in Section 7.31 except that the CRO sweep is synchronized from the SYNC OUT NO DELAY pulse instead of the SYNC OUT DELAY pulse.

b. Set the FREQUENCY controls for 20 pulses per second.

c. Set the CRO sweep rate at 1 MS/CM.

d. Set the DELAY controls for 4 MS.

e. Adjust the LO delay calibration adjustment so the pulse begins 4 MS from the start of the sweep.

f. Set the DELAY controls for 14 MS.

g. Set the CRO sweep for 2 MS/sec.

h. Adjust the HI delay calibration potentiometer so the pulse begins 14 MS from the start of the sweep.

i. Check the dial at pulse delays of 2 MS, 6 MS, 10 MS, 16 MS and 20 MS.

k. If dial readings are not accurate within ± 5%, repeat steps b through i. The DELAY dial should now read within ± 5% on all ranges.

7.34 Voltage Calibration

a. The CRO connections are the same as outlined in Section 7.31. The CRO vertical amplifier must be calibrated from a known source voltage.

b. Set the FREQUENCY controls for 40 pulses per second.

c. Set the DURATION controls for a pulse duration of 12.5 MS.

c. Connect a lead from the white ground terminal (GND) of the SD 5 to the ground terminal of the CRO.

d. Connect a lead from the orange SYNC OUT DELAY terminal of the SD 5 to the external synchronization or trigger terminal of the CRO.

e. Set the SD 5 controls as follows:

MODE	-	REPEAT
FREQUENCY	-	160 pulses per second
DELAY	-	.2 MS
DURATION	-	2 MS
STIMULUS SELECTOR	-	REGULAR
OUTPUT	-	MONO
POLARITY	-	NORMAL
VOLTS	-	10

f. Adjust the CRO sensitivity controls for a vertical amplitude of about 4 centimeters on the CRO.

g. Set the CRO sweep controls for a rate of 5 MS/CM.

h. Adjust the CRO synchronization controls for a standing wave pattern.

i. With a small screw driver, adjust the FREQUENCY calibration potentiometer so that 8 full pulses have a duration of exactly 50 MS. The FREQUENCY dial readings should now be accurate within ± 5% on all ranges.

7.32 Duration Calibration

a. Connect the SD 5 to the CRO as outlined in Section 7.31.

b. Set the frequency controls for 20 pulses per second.

c. Set the DURATION controls for a pulse duration of 4 MS.

d. Set the CRO sweep speed for 1 MS/CM.

e. Adjust the LO duration calibration potentiometer for a pulse duration of 4 MS.

f. Set the DURATION controls for a pulse duration of 14 MS.

g. Set the CRO sweep for 2 MS/CM.

d. With the VOLTS dial fully counter clockwise, the VOLTS MULTIPLY BY switch on 10 and the CRO vertical amplifier at a sensitivity of 2 volts per centimeter, turn the VOLTS dial slowly clockwise and note whether the pulse amplitude is increading as the dial passes the 0.8 position. If not remove the dial (by loosening the Allen Set screw) and rotate the shaft clockwise just past the place where the pulse amplitude starts increasing.

e. Replace the dial with the indicator pointing to 0.8, being careful not to rotate the shaft. Repeat step d.

f. Reduce the CRO vertical amplifier sensitivity to 20 volts per centimeter.

g. Set the VOLTS control for 50 volts.

h. Adjust the voltage calibration potentiometer for a deflection of 50 volts on the CRO. The VOLTS controls should now read within ± 10% on all ranges.

7.4 CALIBRATION USING AN UNCALIBRATED CRO

7.41 Frequency Calibration

a. Connect a line frequency signal to the CRO vertical amplifier. (Just an ungrounded wire connected to the vertical amplifier input terminal usually provides sufficient signal.)

b. Adjust the sweep circuit until a standing wave pattern of exactly three full cycles of line frequency signals are displayed. Throughout the frequency calibration procedure synchronize the sweep from the line frequency and do not change the settings of the sweep controls.

c. Connect the output of the SD5 to the input of the CRO vertical amplifier and adjust the output voltage (VOLTS) controls of the SD5 and the vertical amplifier sensitivity controls for an amplitude of about 4 CM on the CRO.

d. Set the FREQUENCY controls on the SD5 for 180 (if the line frequency is 60 cycles per second) or 150 (if the line frequency is 50 cycles per second).

e. If the pulses are moving on the trace adjust the frequency calibration potentiometer until the pulses have become stationary. There should be exactly 9 pulses on the trace. If there are 8 or 10 pulses, readjust the frequency calibration adjustment until 9 pulses are stopped on the CRO trace. The pulses may start to move on the trace again after a short time even though none of the control settings have been changed, indicating a slight change in pulse frequency. These changes in frequency are negligible and do not require readjustment of the frequency calibration potentiometer. The magnitude of the relation between these small frequency changes and the rate of movement of the pulses on the trace can be seen by noting the rate of pulse movement resulting from changing FREQUENCY dial from 180 to 171 or 189 (the 5% tolerance limits). The corresponding settings for a 50 CPS line frequency are 150 to 135 or 165.

f. Check the dial readings using the following procedure. Start with the FREQUENCY dial fully counterclockwise and adjust until one pulse is stopped on the trace. The pulse rate is now 20 per second for a 60 CPS line frequency or 16.7 CPS for a 50 CPS line frequency. Write down the reading. Turn the FREQUENCY dial until two pulses are stopped on the trace. Record the dial reading. Repeat the procedure for three, four, five, six, seven, eight, nine and ten pulses. The correct dial readings for the various numbers of standing pulses are shown in the following table.

	60 CPS LINE FREQUENCY		50 CPS LINE FREQUENCY	
PULSES	Dial Readings	5% Tolerance Limits	Dial Readings	5% Tolerance Limits
1	20	19 - 21	16.7	15.9 - 17.5
2	40	34 - 42	33.3	31.6 - 35.0
3	60	57 - 63	50	47.5 - 52.5
4	80	76 - 84	66.7	63.4 - 70.0
5	100	95 - 105	83.3	78.9 - 87.7
6	120	114 - 126	100	95 - 105
7	140	133 - 147	116.7	110.9 - 122.5
8	160	152 - 168	133.3	126.6 - 140.0
9	180	171 - 189	150	142.5 - 157.5
10	200	190 - 210	166.7	158.4 - 175.0
11			183.3	174.1 - 192.5
12			200	190.0 - 210.0

7.42 Duration Calibration

a. Connect a line frequency signal to the CRO vertical amplifier as in Section 7.41, a.

b. Adjust the CRO sweep controls so a stationary pattern of three full cycles is displayed on the CRO.

c. Mark on the CRO face the beginning of the sweep, the exact end of the first full cycle and the end of the sweep. Do not change the settings of the CRO sweep controls.

d. Connect the SD 5 output to the CRO vertical amplifier input and adjust the CRO sensitivity controls so the displayed wave form is about 4 cm in amplitude.

e. With the CRO sweep still synchronized from line frequency, adjust the FREQUENCY controls of the SD 5 so that one stationary pulse is displayed.

f. Switch to internal synchronization of the CRO.

g. Obtain a stationary pattern using the CRO synchronization control, using just enough control to hold the pattern. A single pulse should now be displayed with the pulse starting exactly at the beginning of the trace. If part of the pulse can be seen at the right end of the trace the CRO is improperly synchronized.

h. Make certain the sweep starts and ends at the marks made in Step c.

i. Set the DURATION dial to 16.7 milliseconds. (20 MS if the line frequency is 50 cycles)

k. If the end of the pulse is not exactly at the mark indicating the end of the first cycle (Step c) adjust the HI duration adjustment until the pulse ends exactly at the mark.

l. Make a mark on the CRO face exactly one-fourth of the distance from the beginning of the sweep to the mark indicating one full cycle of the line frequency.

m. Set the frequency controls for a duration of 4.2 MS. (5MS for 50 CPS line frequency)

n. If the pulse does not end exactly at the mark made in Step 1, adjust the LO duration calibration potentiometer until the pulse does end at this mark. (The accuracy of this measurement depends on the linearity of the sweep.)

o. Re-check the setting at 16.7 milliseconds (step k) and repeat k through n if necessary. If care is taken it should be possible to calibrate the SD5 with an accuracy of ± 10% using this procedure.

7.43 Delay Calibration

a. Connect a line frequency signal to the CRO vertical amplifier as in Section 7.41, a.

b. Adjust the CRO sweep controls so a stationary pattern of three full cycles is displayed on the CRO.

c. Mark on the CRO face the beginning of the sweep, the exact end of the first full cycle and the end of the sweep. Do not change the settings on the CRO sweep controls.

d. Connect the SD 5 output to the CRO vertical amplifier input and adjust the CRO sensitivity controls so the displayed wave form is about 4 cm in amplitude.

e. With the CRO sweep still synchronized from line frequency, adjust the FREQUENCY controls of the SD 5 so that one stationary pulse is displayed.

f. Synchronize the CRO with the SYNC OUT NO DELAY pulse from the SD 5, and obtain a stationary pattern using just enough control to hold the pattern. One pulse should be displayed.

g. Make certain the sweep starts and ends at the marks made in Step c.

h. Set the DELAY dial to 16.7 milliseconds. (20 MS if the line frequency is 50 cycles)

i. If the beginning of the pulse is not exactly at the mark indicating the end of the first cycle (Step c) adjust the HI duration calibration potentiometer until the pulse begins exactly at the mark.

k. Make a mark on the CRO face exactly one-fourth of the distance from the beginning of the sweep to the mark indicating one full cycle of the line frequency.

l. Set the DURATION controls for 4.2 MS (5.0 MS for 50 CPS line frequency).

m. If the pulse does not begin exactly at the mark made in Step l, adjust the LO duration calibration potentiometer until the pulse does begin at this mark. (The accuracy of this measurement depends on the linearity of the sweep.)

n. Re-check the setting of 16.7 milliseconds (steps i and k) and repeat steps k through m if necessary. If care is taken it should be possible to calibrate the SD 5 with an accuracy of ± 10% using this procedure.

7.44 Voltage Calibration (using a DC voltmeter)

a. Turn the VOLTS dial to its counter clockwise limit.

b. Turn the VOLTS MULTIPLY BY switch to X10.

c. Set the OUTPUT switch to DC.

d. Set the voltmeter on a scale where 10 volts will give approximately a mid scale reading.

e. Turn the VOLTS dial slowly clockwise and note whether the voltmeter reading is increasing as the indicator passes the 0.8 mark. If not, remove the dial (by loosening the Allen set screw) and rotate the shaft just past the position where the voltmeter reading starts increasing.

f. Replace the dial with the indicator pointing to 0.8, being careful not to rotate the shaft. Repeat step d.

g. Set the voltmeter to a scale where 50 volts will give at least a mid scale reading.

h. Set the VOLTS dial to 50.

i. Adjust the VOLTS calibration potentiometer until the meter reads 50 volts. The voltage calibration will be as accurate as the voltmeter accuracy. The voltage indicated by the VOLTS controls is the open circuit voltage as read on a CRO or by a voltmeter with a resistance of at least 50,000 ohms (such as a voltmeter with 5,000 ohms per volt on the 10 volt scale or a higher scale).

SECTION 8

MAINTENANCE

8.1 DEFECTS

8.11 Although all stimulators are carefully inspected and tested before shipment, malfunctions can occur. In most instances the difficulty may be remedied by replacing a tube or a fuse. Tubes should be replaced one at a time. (See FIGURE 9.4 for the location of tubes and fuses.) If the performance is not altered replace the old tube before proceeding.

8.12 In those instances where tube or fuse replacement fails to correct the defect or if a fuse blows repeatedly return the unit for repair. A replacement or loaner instrument can usually be supplied upon request in those cases where being without the stimulator while repairs are being made would be inconvenient.

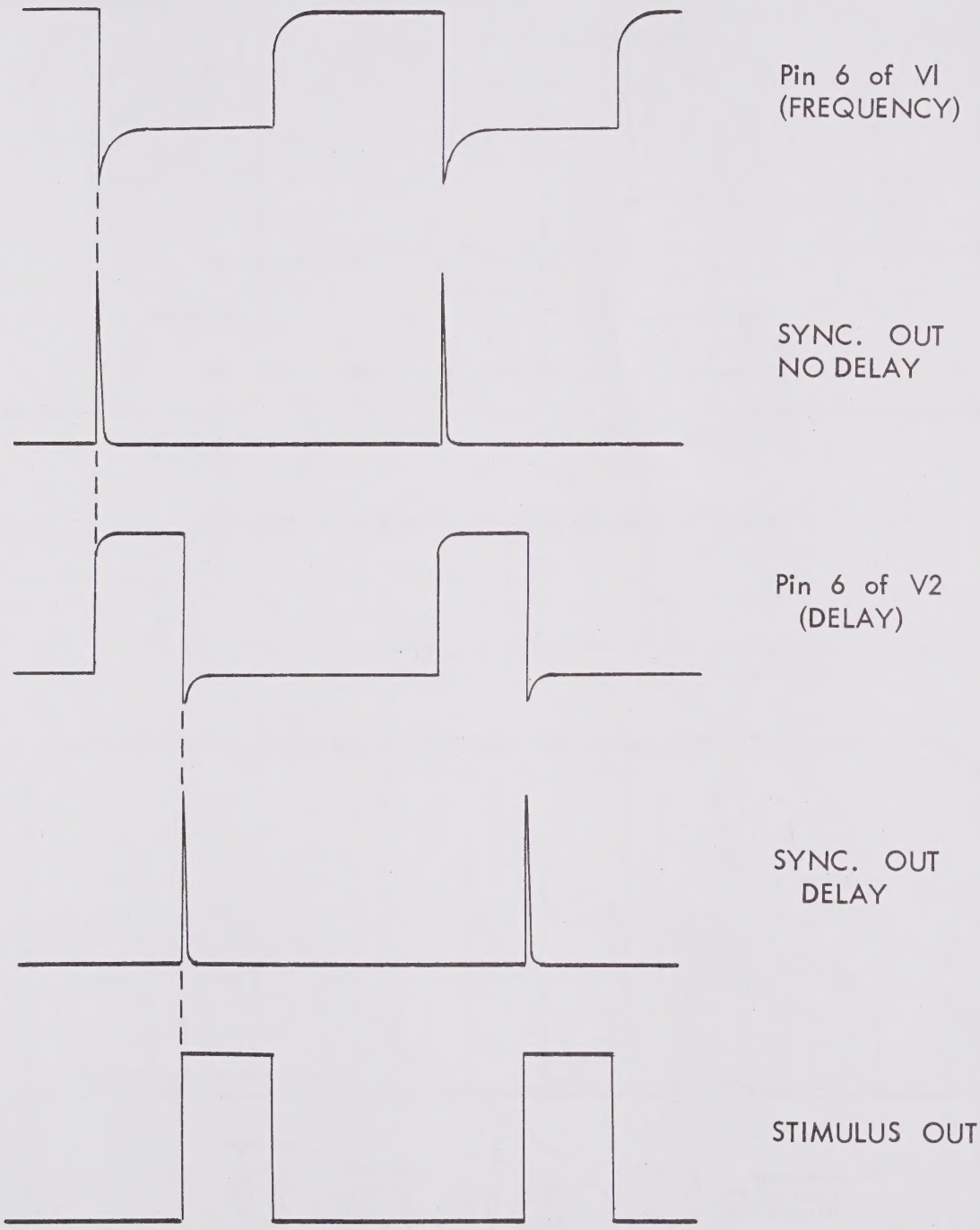

FIGURE 9.2 WAVEFORMS

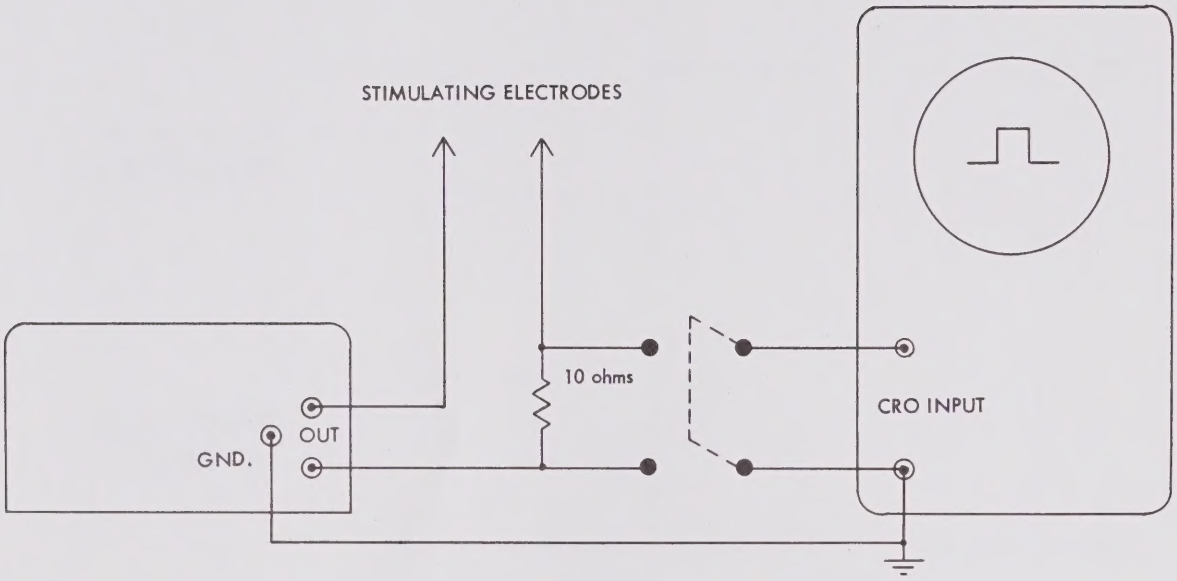

FIGURE 9.3 MONITORING STIMULUS CURRENT

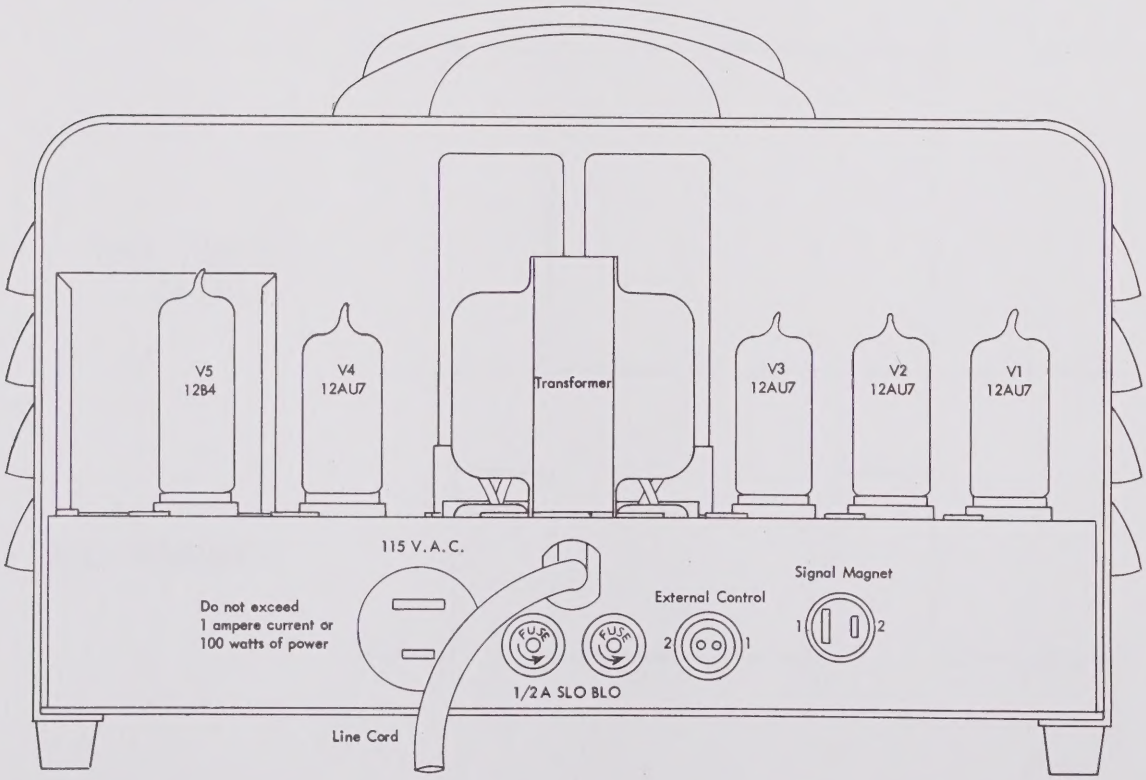

FIGURE 9.4 REAR VIEW OF THE SD5

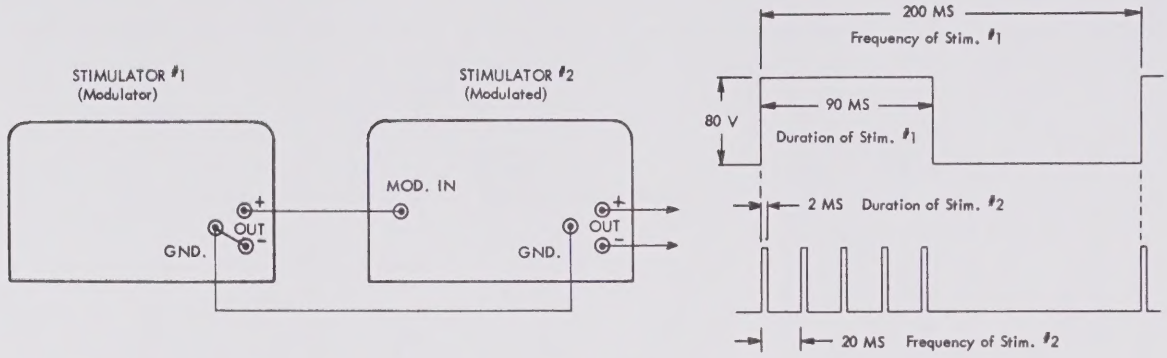

FIGURE 9.5 TRAINS OF PULSES

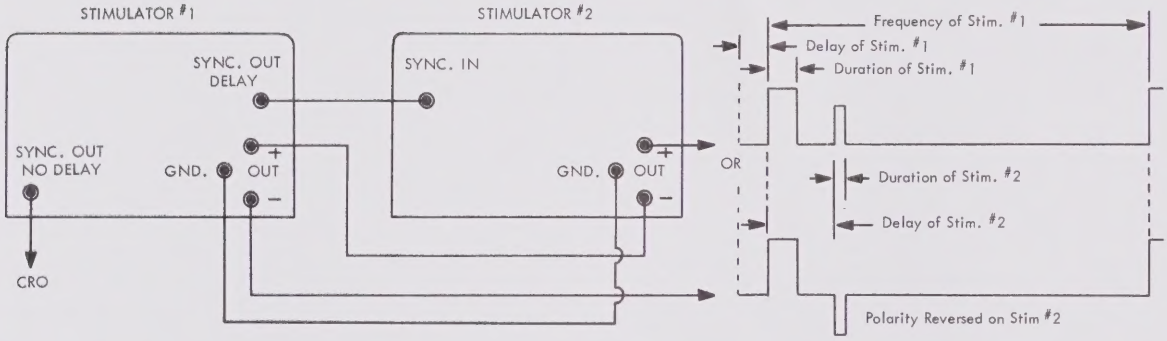

FIGURE 9.6 PAIRS OF UNLIKE PULSES

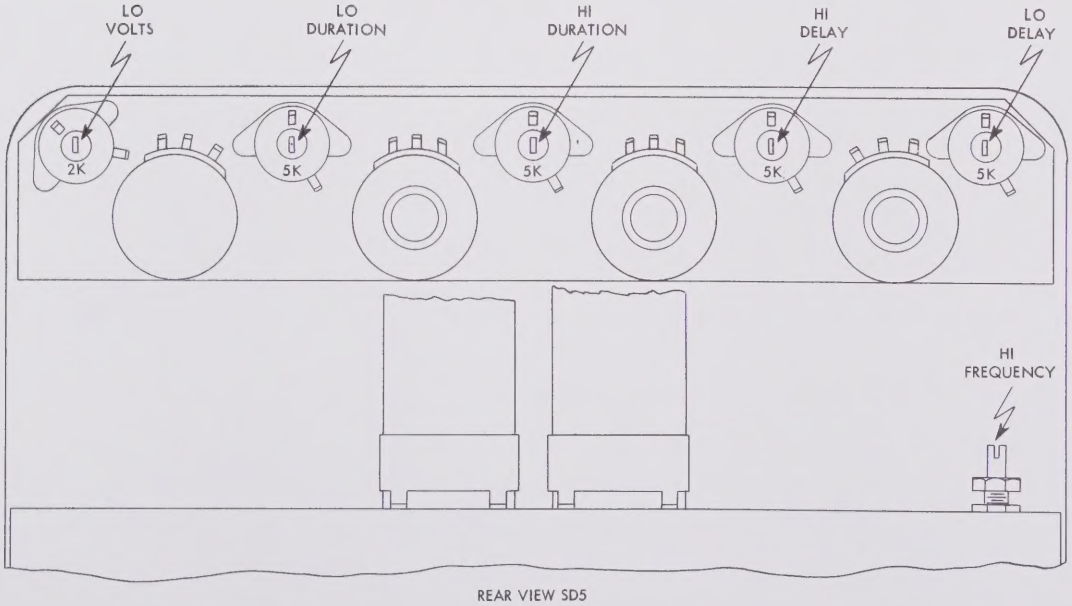

FIGURE 9.7 LOCATION OF CALIBRATION ADJUSTMENTS.

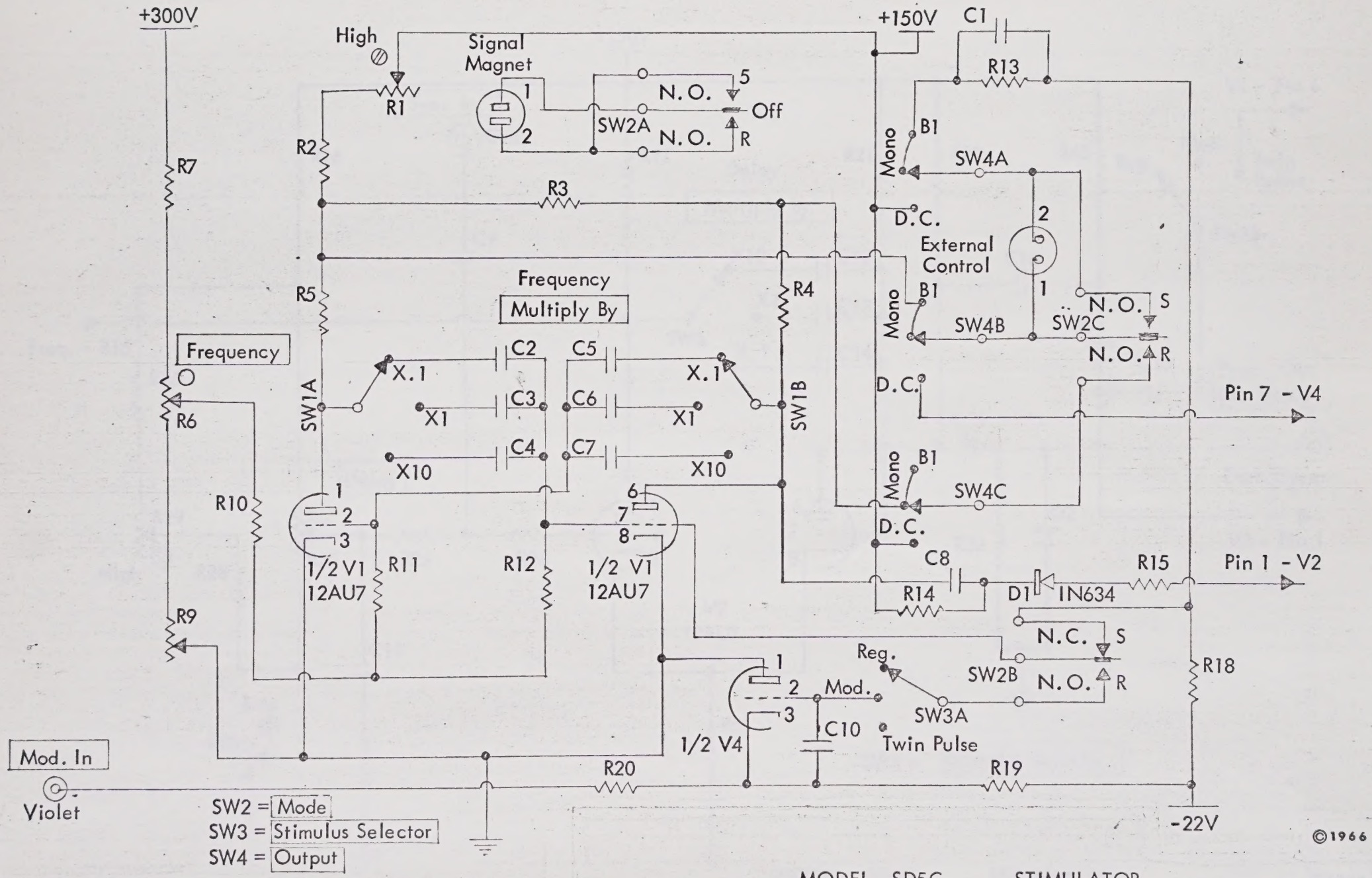

MODEL SD5C STIMULATOR
FREQUENCY AND MODULATOR REF. 1590-2A
APPROVED JOC DATE 3/11/66 CKT. 50093

GRASS MEDICAL INSTRUMENTS SINCE 1935
QUINCY, MASS., U.S.A.

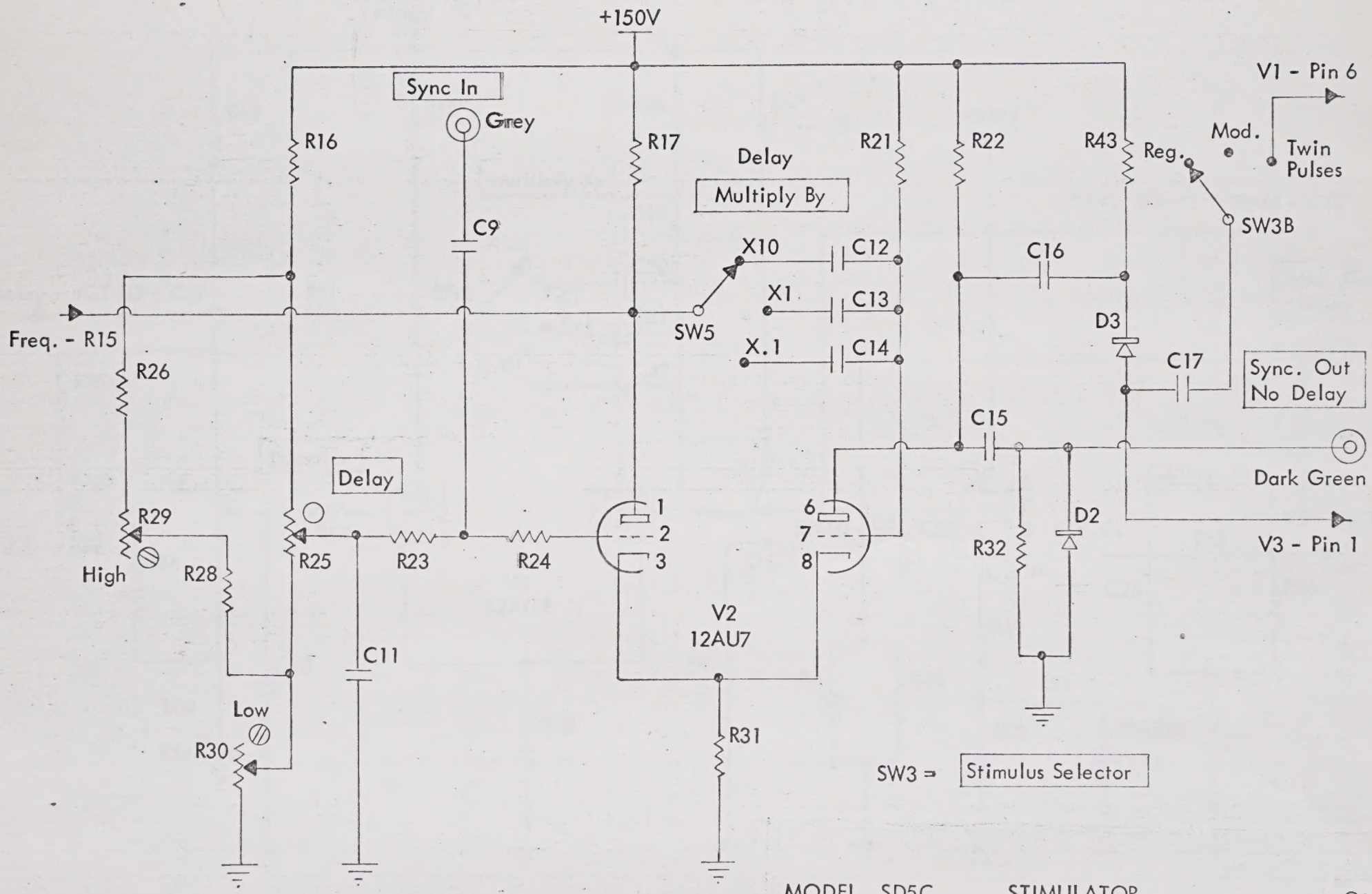

MODEL SD5C STIMULATOR

DELAY

APPROVED JPC DATE 3/11/66 REF. 1590-2B CKT. 50094-1

©1966

GRASS MEDICAL INSTRUMENTS SINCE 1935
QUINCY, MASS., U.S.A.

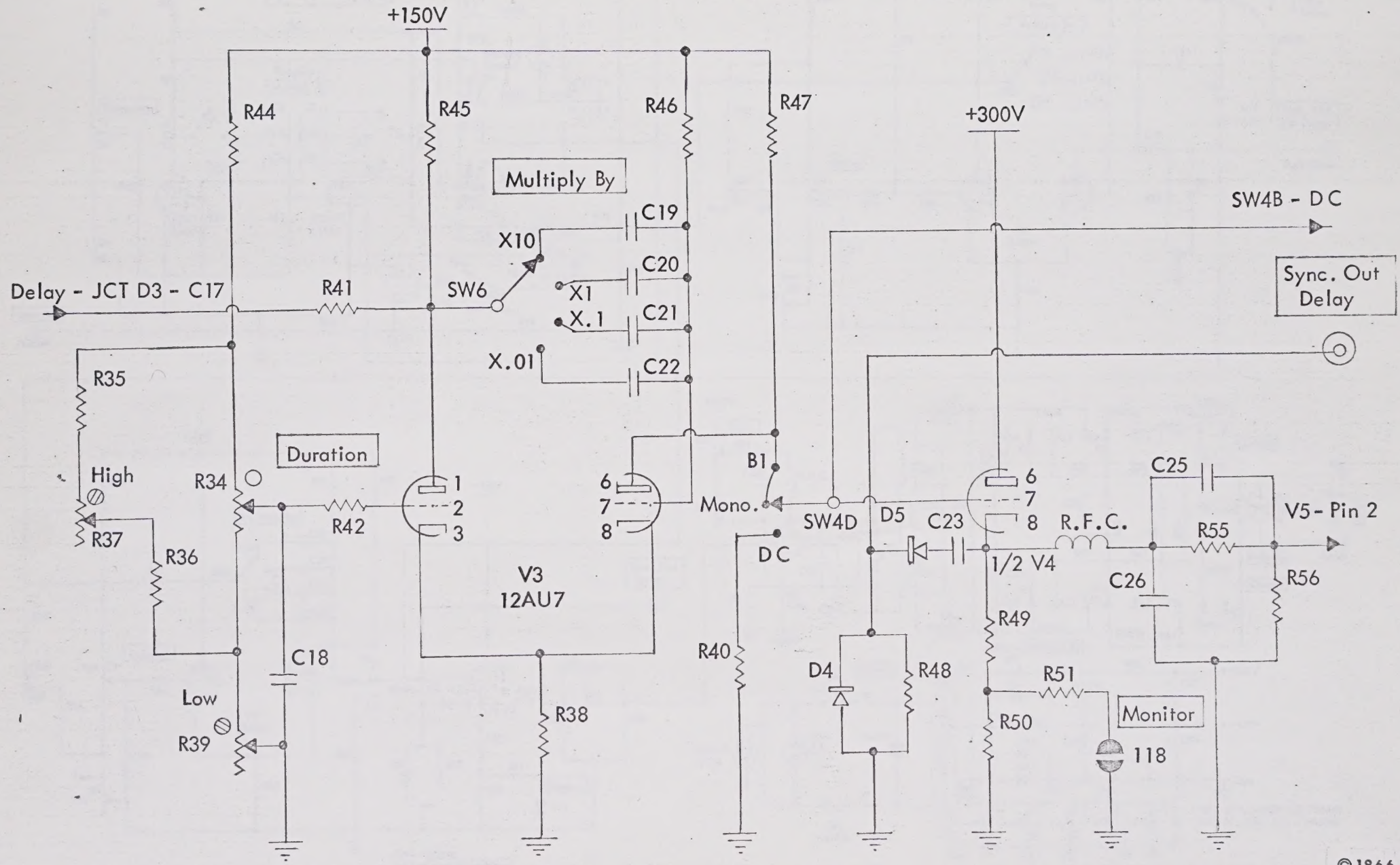

©1966

MODEL SD5C STIMULATOR

DURATION

APPROVED JDC DATE 3/11/66

REF. 1590-2C

CKT. 50095-1

®GRASS MEDICAL INSTRUMENTS SINCE 1935
QUINCY, MASS. U.S.A.

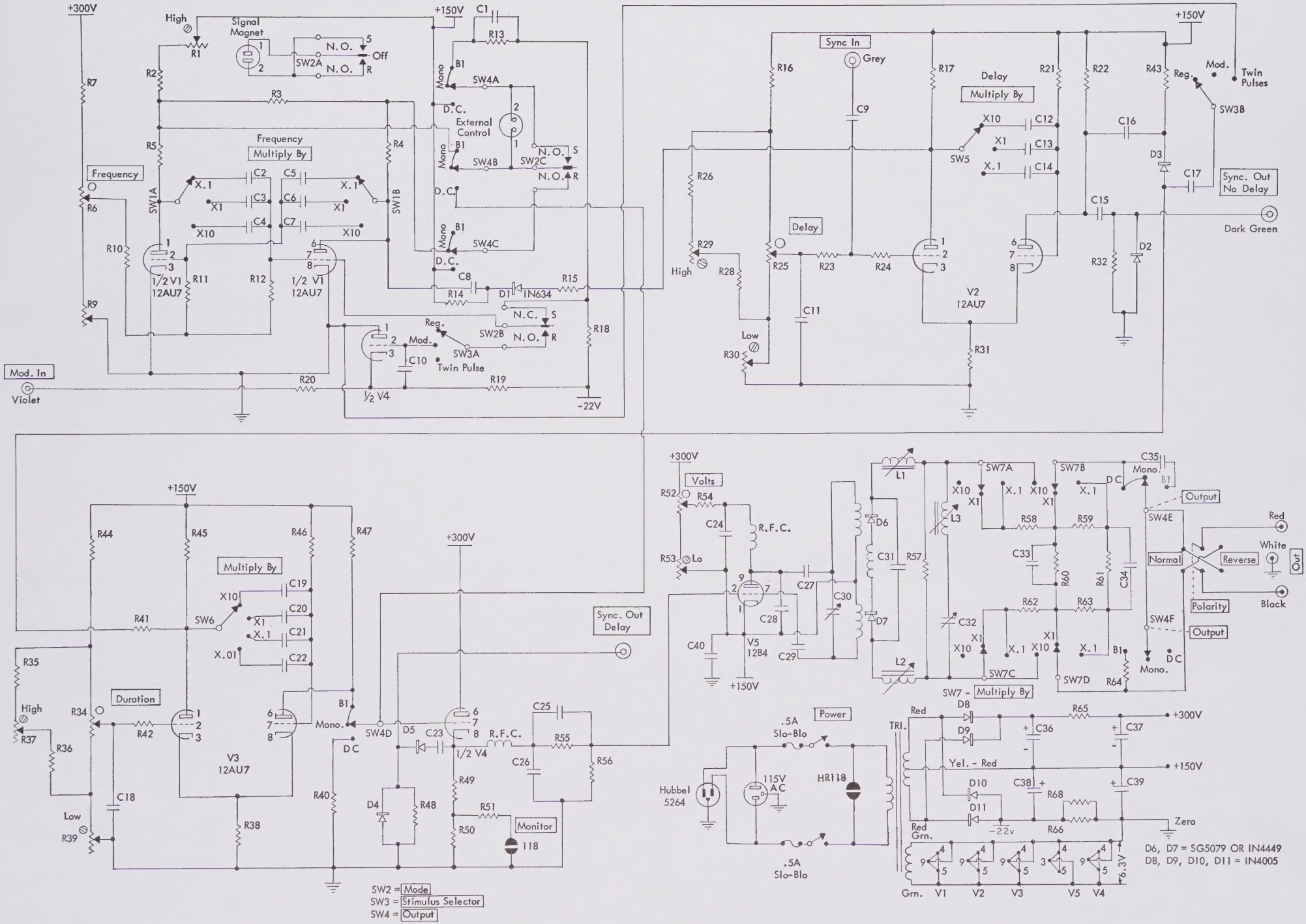
+300V
High
Signal Magnet
R1
R2
R3
R4
R5
R6
R7
R9
R10
R11
R12
R13
R14
R15
R18
R19
R20
R25
R26
R28
R29
R30
R31
R32
R23
R24
R16
R17
R21
R22
R43
C1
C2
C3
C4
C5
C6
C7
C8
C9
C10
C11
C12
C13
C14
C15
C16
C17
N.O.
Off
SW2A
SW2B
SW2C
SW3A
SW3B
SW4A
SW4B
SW4C
SW5
Mono
B1
D.C.
External Control
Frequency
Multiply By
X.1
X1
X10
SW1A
SW1B
1/2 V1 12AU7
V2 12AU7
Reg.
Mod.
Twin Pulse
Twin Pulses
N.C.
D1 1N634
½ V4
-22V
Mod. In
Violet
Sync In
Grey
Delay
Low
Sync Out No Delay
Dark Green
D2
D3
+150V
R44
R45
R46
R47
R41
R35
R34
R37
R36
R42
R38
R39
R40
R18
C18
C19
C20
C21
C22
SW6
X.01
Duration
V3 12AU7
SW4D
D5
C23
R.F.C.
1/2 V4
R49
R50
R51
R48
D4
Monitor
118
C25
C26
R55
R56
Sync. Out Delay
R52
R53
R54
Volts
Lo
C24
C27
C28
C29
C30
C40
V5 12B4
L1
L2
L3
D6
D7
C31
R57
C32
SW7A
SW7B
SW7C
SW7D
SW7 - Multiply By
R58
R59
R60
R61
R62
R63
R64
C33
C34
C35
SW4E
SW4F
Output
Normal
Reverse
Polarity
Red
White
Black
Out
Power
.5A Slo-Blo
Hubbel 5264
115V AC
HR118
TR1.
D8
D9
D10
D11
R65
R66
R68
C36
C37
C38
C39
Yel. - Red
Red Grn.
Zero
Grn.
V1
V2
V3
V5
V4
6.3V
D6, D7 = SG5079 OR IN4449
D8, D9, D10, D11 = IN4005
SW2 = Mode
SW3 = Stimulus Selector
SW4 = Output
GRASS MEDICAL INSTRUMENTS
QUINCY, MASS. U.S.A.
MODEL SD5C STIMULATOR
CIRCUIT DIAGRAM
APPROVED
DATE 3/11/66
REF. 50096-1
CKT. 50319
©1966